TCT XL-Saw
Shop Manual

www.tctautomation.com

TCT XLSaw Lockout-Tagout Procedure

Move Main Disconnect handle to the OFF position

(Disconnect is located on the side of the saw's electrical cabinet)

Insert lock and "DO NOT OPERATE" tag through hole in disconnect handle

Procedure for operation of TCT XL-Saw

1 Make certain that the feed rollers are clean before starting the shift

2 Make certain that the outfeed roller height adjusting bolts are set correctly

(see illustration on pages 4 and 5)

3 Check inside of saw cabinet for any wood blocks that could cause a jam.

4 Turn on the power home the blade and Z-axis

5 Find a 16-20 foot straight 2x4 for making test cuts

6 Open the test cut file and cut a 16' to 20' square-square test board adjusting the stretch/shrink on the main screen to an accurate length. (it is best to use a test file that is set up in 1 inch increments i.e. 16-0-0, 15-11-0, 15-10-0 so you can cut on the same board several time for a consistent result) you can also use these cuts to test the 90 degree calibration as well as the "pull in distance" setting.

7 Next drop to a piece in the test file to make a double 45 degree cut. This will test the z-axis centerline calibration. If this measurement is off, clean and lube the z-axis lead screw then home the z-axis again and recut. If the centerline is still off, change the z-axis values in the Initialize Motors screen and rehome.

Once the homing and test cuts are complete, <u>do not rehome or reset</u> the A or Z axis or change the stretch/shrink settings without repeating the test procedure.

Do not load lumber on the feeder with the leading edge bowed up.

Do not completely fill the autofeeder (leave a 12" gap for backup)

XLSAW CALIBRATION

1. Clean machine completely including all 3 feed rollers and the Z-axis acme screw. Check to make certain that there is no excessive end play in the Z-axis.

2. Clamp a 2x4 in the infeed and outfeed and check to see if the 12 adjustment bolts are correct (see illustration 1)

3. Take a straight 16 ft 2x4 and jog it completely thru the saw first with both rollers clamped then with just the infeed and lastly with just the outfeed. The board should always stay against the roller fence.

4. Clamp the 16ft 2x4 in the infeed roller and jog it 100 inches using the 100 inch jog function on the settings screen. Adjust the axis scale factor as needed to move the board exactly 100 inches. Repeat the procedure with the outfeed roller and adjust accordingly.

(See illustration 2 for marking 2x4) The new axis scale factor can be calibrated by dividing the counts moved (example 1,750,000) By the actual distance moved (example 99.75 inches)
1,750,000 div by 99.75 = 17544 counts per inch (new axis scale factor)

5. Set up a test file in manual cut, if you do not already have one on your saw. It should contain 2x4 thru 2x10 starting with 16 foot and decreasing in one inch increments to 15 ft 6 inches in all lumber widths. All cuts will be 90 degrees. Start by cutting the 2x4 to the 16 ft length. Adjust as necessary with the Stretch/Shrink Adjustment on the main screen of the XL-Saw

program. It works best to do this in single cut mode. Follow up with the 2x6 the 2x8 and 2x10, adjusting their setting as needed. Be aware that wider widths may us a negative adjustment. When making these cuts, you will also want to insure that cut exactly square. Adjust on the Initialize Motors Screen as necessary (A-axis).

6. Cut a straight 8ft 2x4 on a double 45 deg. (front end only) Check that the centerline is correct (1.75 inches) This centerline must be <u>exactly</u> correct. Adjust the Z-axis home as necessary.

7. Check the kerf value. Cut a 3 foot 2x4 90/90 then cut a 3 foot 2x4 with a 30deg / 150deg on both ends. If the angled board is longer than the sq board, the kerf is set too high. If the angle board is shorter than the sq board, the kerf is set too low. The kerf can only be set in the optimizer program. This test needs to be made every time the blade is changed .

8. Cut the 30/150 test (see attached documentation) If all 4 pieces cut are the same size and angle, your calibration has been successful.

Check roller clamp and rock adjustment

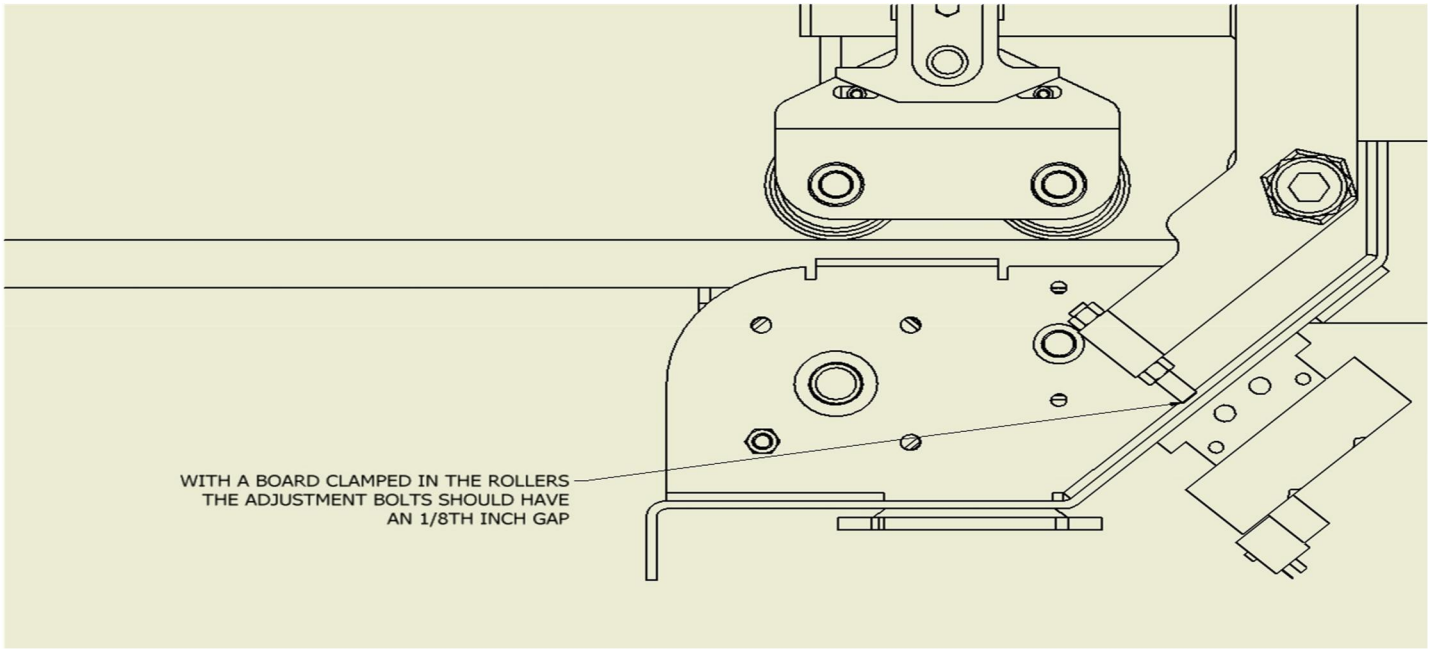

Note: the infeed should be ¼ inch gap, the outfeed should be .1”

Adjustment bolts should be set at all 4 locations. Roller can be clamped with a small straight slot screw driver pushing and ¼ turning the red button on the correct air valve.

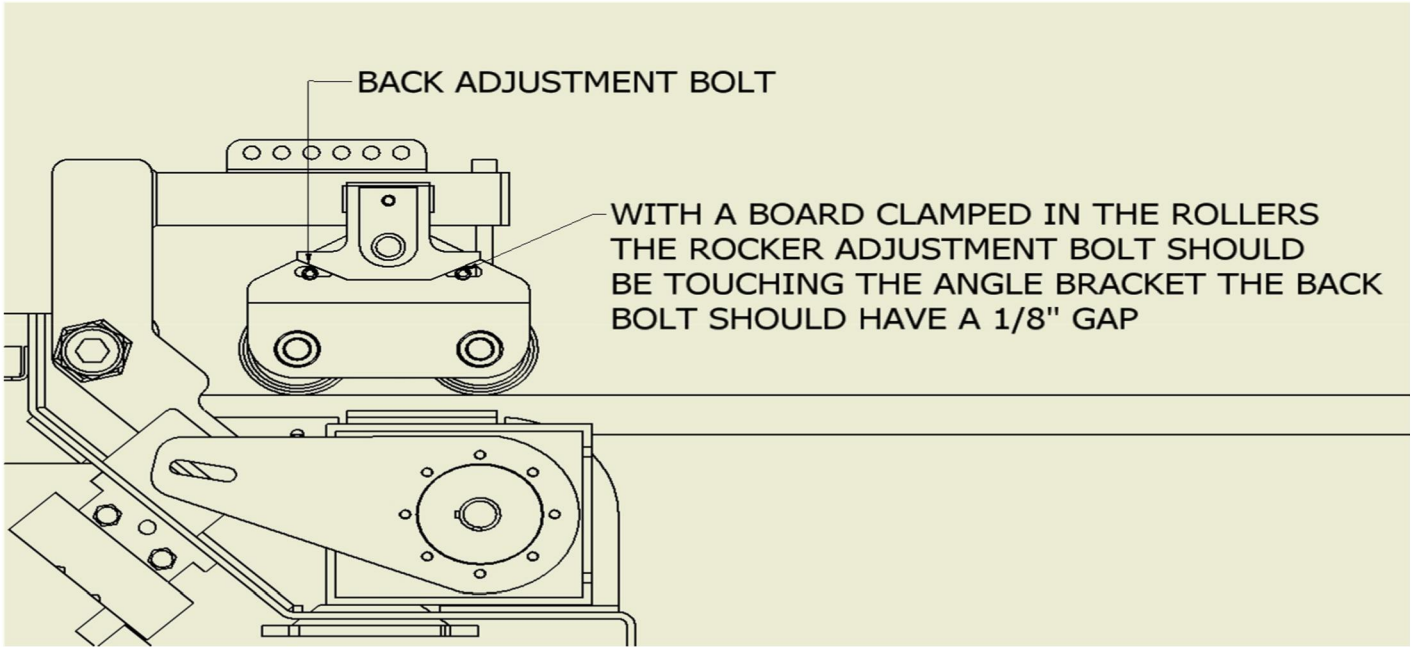

‘30-150’ Testing Guide

The ‘30-150’ test is a cut sequence designed to show that the TCT WebSaw is calibrated correctly and cutting accurately. The saw is correctly calibrated if, and only if, the parts are cut identically. If the boards aren’t equal, this section will help diagnose which area(s) of the WebSaw needs adjustment.

Testing the 30-150

You MUST use straight, high-quality lumber that is *exactly* 3 ½” wide for this test, or the results will not be valid! Use one stock board to cut all four parts. Cut a series of 2 90-30 and 2 90-150 boards, 18” long each, as shown below. As each board is cut, mark its number and the direction it was cut as pictured below.

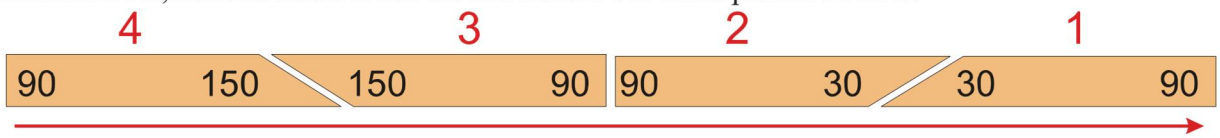

Now stack the boards vertically (as shown below) in the order they were cut (1, 2, 3, then 4) on a FLAT, CLEAN SURFACE. Compare the stack with the following scenarios to determine if any adjustment is needed or what adjustment needs to be made. (NOTE that the 30° and 150° angles must be correct, or the test will not be valid)

#1 (Same, Same, Same, Same)

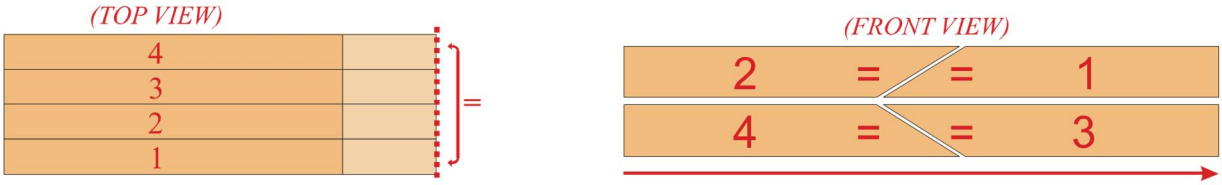

All parts are the same. The WebSaw is calibrated correctly; no adjustments are needed.

#2 (Long, Short, Long, Short)

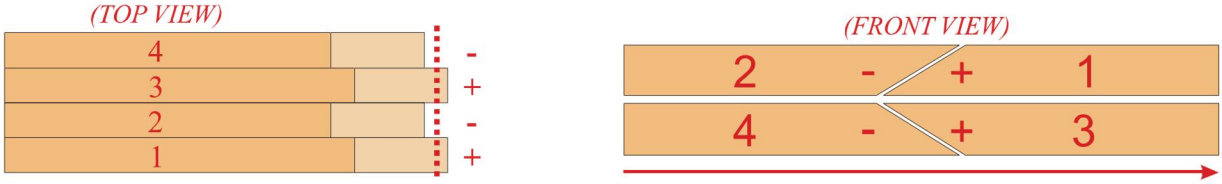

1 and 3 are long; 2 and 4 are short.

Resolution: Blade is too far to the left. Adjust the blade motor to the right, half the amount of difference between the boards.

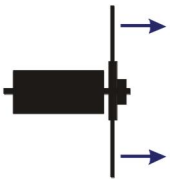

#3 (Short, Long, Short, Long)

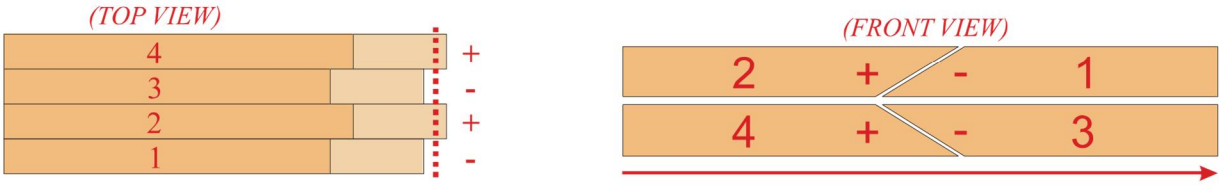

1 and 3 are short; 2 and 4 are long.

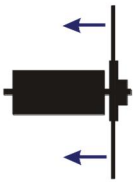

Resolution: Blade is too far to the right. Adjust the blade motor to the left, half the amount of difference between the boards.

#4 (Short, Long, Long, Short)

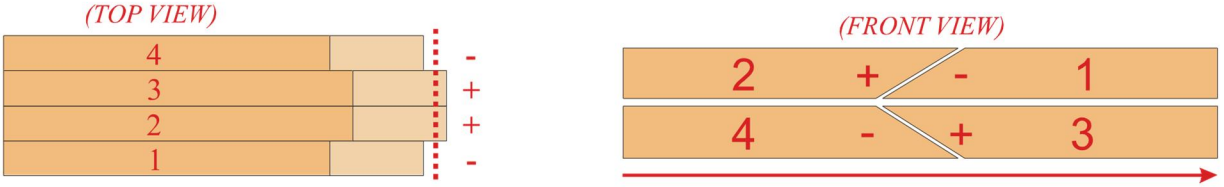

1 and 4 are long; 2 and 3 are short.

Resolution: Fence is too far towards the front of the WebSaw. Perform the Centerline Calibration test to determine how far to move the fence.

#5 (Long, Short, Short, Long)

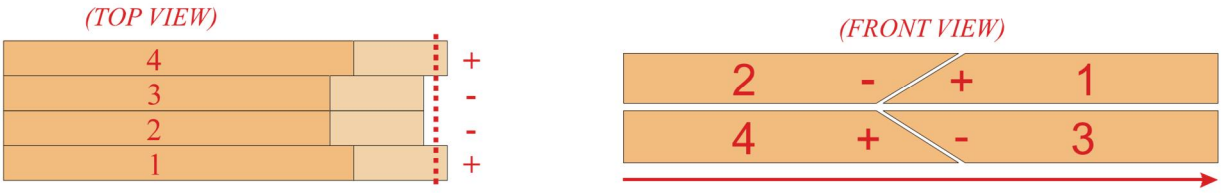

1 and 4 are short; 2 and 3 are long.

Resolution: Fence is too far away from the front of the WebSaw. Perform the Centerline Calibration test to determine how far to move the fence.

#6 (Same, Same, Long, Short)

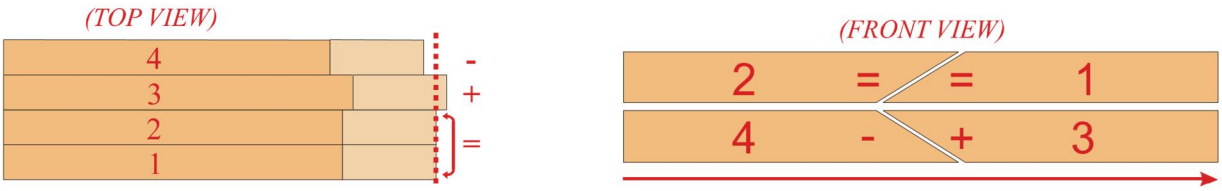

1 and 2 are equal; 3 is long and 4 is short.

Resolution: This is a combination of Scenario #5 (the fence is too far away from the front of the WebSaw), and Scenario #2 (the blade is too far to the left). Perform the Centerline Calibration test to determine how far to move the fence, repeat the 30-150 test, then adjust the blade motor the correct amount.

#7 (Same, Same, Short, Long)

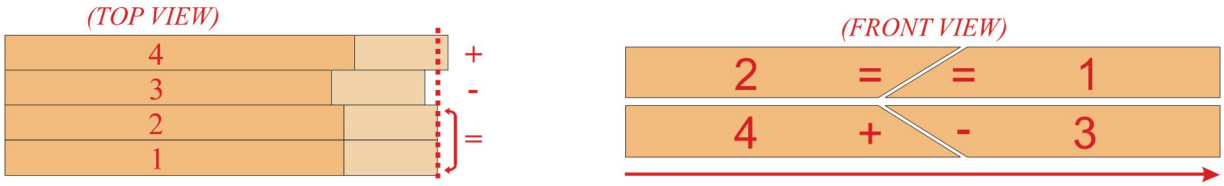

1 and 2 are equal; 3 is short and 4 is long.

Resolution: This is a combination of Scenario #4 (the fence is too far toward the front of the WebSaw), and Scenario #3 (the blade is too far to the right). Perform the Centerline Calibration test to determine how far to move the fence, repeat the 30-150 test, then adjust the blade motor the correct amount.

#8 (Long, Short, Same, Same)

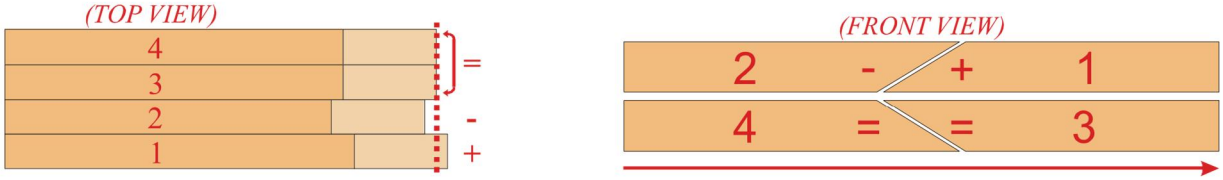

1 is long and 2 is short; 3 and 4 are equal

Resolution: This is a combination of Scenario #4 (the fence is too far toward the front of the WebSaw), and Scenario #2 (the blade is too far to the left). Perform the Centerline Calibration test to determine how far to move the fence, repeat the 30-150 test, then adjust the blade motor the correct amount.

#9 (Short, Long, Same, Same)

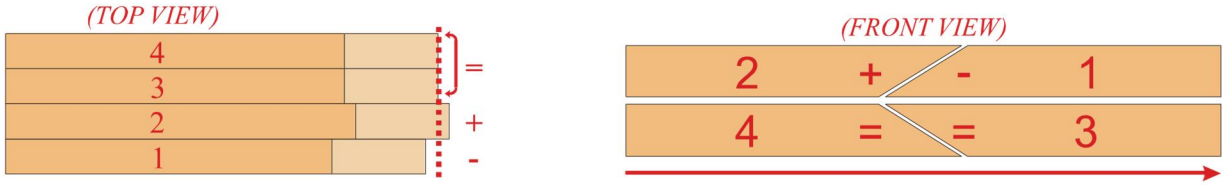

1 is short and 2 is long; 3 and 4 are equal

Resolution: This is a combination of Scenario #5 (the fence is too far toward the front of the WebSaw), and Scenario #3 (the blade is too far to the right). Perform the Centerline Calibration test to determine how far to move the fence, repeat the 30-150 test, then adjust the blade motor the correct amount.

XL-Saw maintenance schedule

Every 4 hours

1 blow out excessive buildup of saw dust in saw cage
2 check for scrap pieces in saw cage (don't forget z-axis area)

Every Shift

1 completely clean out all saw dust inside and outside machine
2 clean and lube Z-axis acme screw (white lithium spray grease only WD-40 will cause damage)
3 clean feed rollers including autofeed roller
4 blow off air cleaners
5 check oil level in filter trio (fill as needed) no oil will cause premature failure of cylinders
6 check adjustment on upper roller adjustment bolts
7 check outfeed upper roller rocking limit bolts
8 spray off print head with acetone (no compressed air)
9 check to ensure that the electrical panel is tightly closed (no saw dust inside)

Once per week

1 grease front grease fitting on saw motor (2 pumps only)
2 clean 3.5" tension rollers (all 6)
3 grease the Z-axis rails (4 fittings)

Once per month

1 grease all flange bearings on saw, conveyors and feeder
2 oil feeder chains (lightly)
3 grease the rear fitting on the saw motor (1 pump only)
4 clean electrical cabinet (inside and out)blow out inside of computer as needed

Every 3 months

1 clean all air valve mufflers (soak in lacquer thinner and blow off)
2 check for loose wires and conduits
3 check for air leaks
4 check tension on feeder chains
5 check for loose bolts

Every year

1 replace air cleaners
2 replace all “tension roller” bearings
3 replace all fence bearings
4 check for wear on feed roller knurling (replace as necessary)
5 check condition of conveyor belting
6 replace autofeeder rub blocks (newer saws have rollers)

XL-Saw Program Logic

1. When you press the power button, it latches the MCR relay as well as activates I/O-1 #9 module M51 which gives an hardware enable to the servo amps as well as latches the C-1 contactor
2. When you press the Blade Start button it latches the ATR relay pulling terminal #1 on VFD-1 to ground to start the saw motor as well as activates I/O-1 #10 module M52, telling the motion controller that the blade is activated. I/O-1 #12 M54 is also activated by VFD-1 terminal #14 blade at speed. The M54 value is looked at during the door opening sequence to insure that the blade has stopped before the door can be opened.
3. When you push the Cycle Start button it activates PLC7 which is waiting for the I/O-1 #14 variable M56 to equal 1. PLC7 also checks to see if the A and Z axis have been homed before calling PLC1. PLC7 also allows for the Cycle Stop button to stop the cycle by changing the value of I/O-1 #15 module M57 to 1. PLC7 also monitors for the blade running signal and will abort “in cycle” if I/O-1 #10 module M52=0.
4. PLC1 is the main plc and begins by resetting all pneumatics to default values then checks to see if the blade is running (M52=1) it then checks to see if the feed roller scale factors have been imported from Labview (values P554 and P665) PLC1 then initiates the Autofeeder to pull in wood. The presence of wood on the feeder is indicated by I/O-1 #13 module M55=1. If the signal is not present, the feeder chains will continue to run.
5. Once the autofeeder has control of the next piece of lumber, PLC1 requests the next set of cut data from Labview by toggling the value of P10 to 1. The plc then starts the main motion program with the command “&1B2R” The program sets the value of P180=1 to indicate that the motion program is running.
6. Motion program 2 begins by setting speeds and accelerations defined by board width. It also determines which of the 3 cut types are called for (centerline plunge, offcenter plunge, or Z-axis cut) The motion program 2 calls for each servo axis go to a position called out in the XL-Cut file written to values P11, the angle and P12 and p13 for the feed rollers. The Z-axis position is normally set to the board center line (P1061 actual board width) divided by two
7. The wood goes to its commanded position and the program calls a subroutine N1000 to drop the blade for a period of time (P81) then raise the blade (P82) and return to the beginning of the motion program to loop through to the next cut position. When the last cut is completed on the stick, the motion program closes and PLC1 starts the process for the next stick. This continues till the job is complete or the operator pushes the Cycle Stop button.

AC-TECH FAULT MESSAGES

FAULT	DESCRIPTION & POSSIBLE CAUSES
AF	High Temperature Fault: Ambient temperature is too high; Cooling fan has failed (if equipped).
CF	Control Fault: A blank EPM , or an EPM with corrupted data has been installed. Performa a factory reset using Parameter 48 - PROGRAM SELECTION.
cF	Incompatibility Fault: An EPM with a different parameter version has been installed. Either remove the EPM or perform a factory reset (Parameter 48) to change the parameter version of the EPM to match the parameter version of the drive.
dF	Dynamic Braking Fault: The drive has sensed that the dynamic braking resistors are overheating and shuts down to protect the resistors.
EF	External Fault: TB-13A and/or TB-13C is set as an External Fault input and TB-13A and/or TB-13C is open with respect to TB-2. Refer to Parameter 10 and/or 12
GF	Data Fault: User data and OEM defaults in the EPM are corrupted.
HF	High DC Bus Voltage Fault: Line voltage is too high; Deceleration rate is too fast; Overhauling load. For fast deceleration or overhauling loads, dynamic braking may be required.
JF	Serial Fault: The watchdog timer has timed out, indication that the serial link has been lost.
LF	Low DC Bus Voltage Fault: Line voltage is too low.
OF	Output Transistor Fault: Phase to phase or phase to ground short circuit on the output; Failed output transistor; Boost settings are too high; Acceleration rate is too fast.
PF	Current Overload Fault: VFD is undersized for the application; Mechanical problem with the driven equipment.
SF	Single-phase Fault: Single-phase input power has been applied to a three-phase drive.
UF	Start Fault: Start command was present when the drive was powered up. Must wait 2 seconds after power-up to apply Start command if START METHOD is set to NORMAL.
F1	EPM fault: The EPM is missing or damaged.
F2-F9, Fo	Internal Faults: The control board has sensed a problem - consult factory.

		VFD1 - Saw motor	VFD2 - Waste conv	VFD3 - AF chains	VFD4 - AF roller	Description
P1		01	01	01	01	line voltage
P2		02	02	02	02	carrier freq
P3		05	05	05	05	start method
P4		04	01	03	03	stop method
P5		02	02	02	02	standard speed source
P6		02	02	02	02	TB14 output
P8		01	01	01	01	TB30 output
P9		01	01	01	01	TB31 output
P10		01	01	01	01	TB13A function
P11		07	07	07	07	TB13B function
P12		01	01	01	01	TB13C function
P13		01	01	01	01	TB15 output
P14		01	01	01	01	control
P15		02	02	02	02	serial link
P16		02	02	02	02	units editing
P17		02	02	02	02	rotation
P18		01	01	01	01	not used
P19		2.5	1.0	0.5	0.5	accel time
P20		30.0	1.0	0.4	0.3	decel time
P21		2.5	0.0	0.0	0.0	DC brake time
P22		5.0	0.0	0.0	0.0	dc brake voltage
P23		0.0	0.0	0.0	0.0	min freq
P24		80.0	60.0	60.0	60.0	max freq
P25		180.0	180.0	180.0	180.0	current limit
P26		100.0	100.0	100.0	100.0	motor overload
P27		60.0	60.0	60.0	60.0	base freq
P28		3.0	5.3	5.3	5.3	fixed boost
P29		0.0	0.0	0.0	0.0	accell boost
P30		0.0	0.0	0.0	0.0	slip compensation
P31		60.0	40.0	50.0	30.0	preset speeds
P32		6.0	40.0	40.0	30.0	preset speeds
P33		0.0	0.0	0.0	0.0	preset speeds
P34		0.0	0.0	0.0	0.0	preset speeds
P35		0.0	0.0	0.0	0.0	preset speeds
P36		0.0	0.0	0.0	0.0	preset speeds
P37		0.0	0.0	0.0	0.0	preset speeds
P38		0.0	0.0	0.0	0.0	skip bandwidth
P39		0.0	0.0	0.0	0.0	speed scaling
P40		60.0	60.0	60.0	60.0	frequency scaling
P41		20.0	20.0	20.0	20.0	load scaling
P42		1.0	1.0	1.0	1.0	accel/decel #2
P43		1	1	1	1	serial address
P44		03	03	03	03	password

COMPONENT	DESCRIPTION	NOTES
DB0	ground junction	incoming power ground
DB1	PH-1 junction	incoming 3 phase leg 1
DB2	PH-2 junction	incoming 3 phase leg 2
DB3	PH-3 junction	incoming 3 phase leg 3
CB1	SD-1 breaker	
CB2	SD-2 breaker	
CB3	SD-4 breaker	
CB4	Power supply breaker	
CB5	C-1 contact breaker	
CB6	C-2 contact breaker	
CB7	C-3 contact breaker	
SD-1	infeed servo amp	Coppley Controls Xenus XLT amplifier
SD-2	outfeed servo amp	Coppley Controls Xenus XLT amplifier
SD-3	Z-axis servo amp	NSK EDC servo amp (XENUS ON NEW MODEL)
SD-4	saw motor pivot servo amp	NSK ESB servo amp (XENUS ON NEW MODEL)
C-1	contactor for VFD 3 and 4	
C-2	contactor for VFD 1 and 2	
C-3	contactor for outfeed conveyor	
VFD-1	saw motor VFD	AC-Tech variable frequency drive 5hp (see settings)
VFD-2	scrap conveyor VFD	AC-Tech variable frequency drive 1hp (see settings)
VFD-3	feeder chain VFD	AC-Tech variable frequency drive 1hp (see settings)
VFD-4	Autofeed roller VFD	AC-Tech variable frequency drive 1hp (see settings)
PS-1	24vdc power supply	DC power for user and pnuematic controls
PS-2	+15 -15 vdc power supply	DC power for servo control
PS-3	5vdc power supply I/O	DC power for I/O logic
PS-4	5vdc power supply Clipper	DC power for Clipper motion board

FU-1	24vdc fuse	
FU-2	+15vdc fuse	
FU-3	-15vdc fuse	
FU-4	5vdc fuse	
I/O-1	JTHW Opto 22 board	printer control and saw outputs
I/O-2	JOPT Opto 22 board	autofeed outputs and 8 inputs
ESR	Estop relay	
MCR	Motor control relay	
ATR	Actech relay	
WCR	Waste conv relay	
TB-1	Low voltage junction	
JMACH-1	Clipper motor control breakout	all servo control runs through this breakout bar
CLIPPER	Delta Tau motion board	

SHIMPO DRIVE PANEL 1/1/2016 TO PRESENT

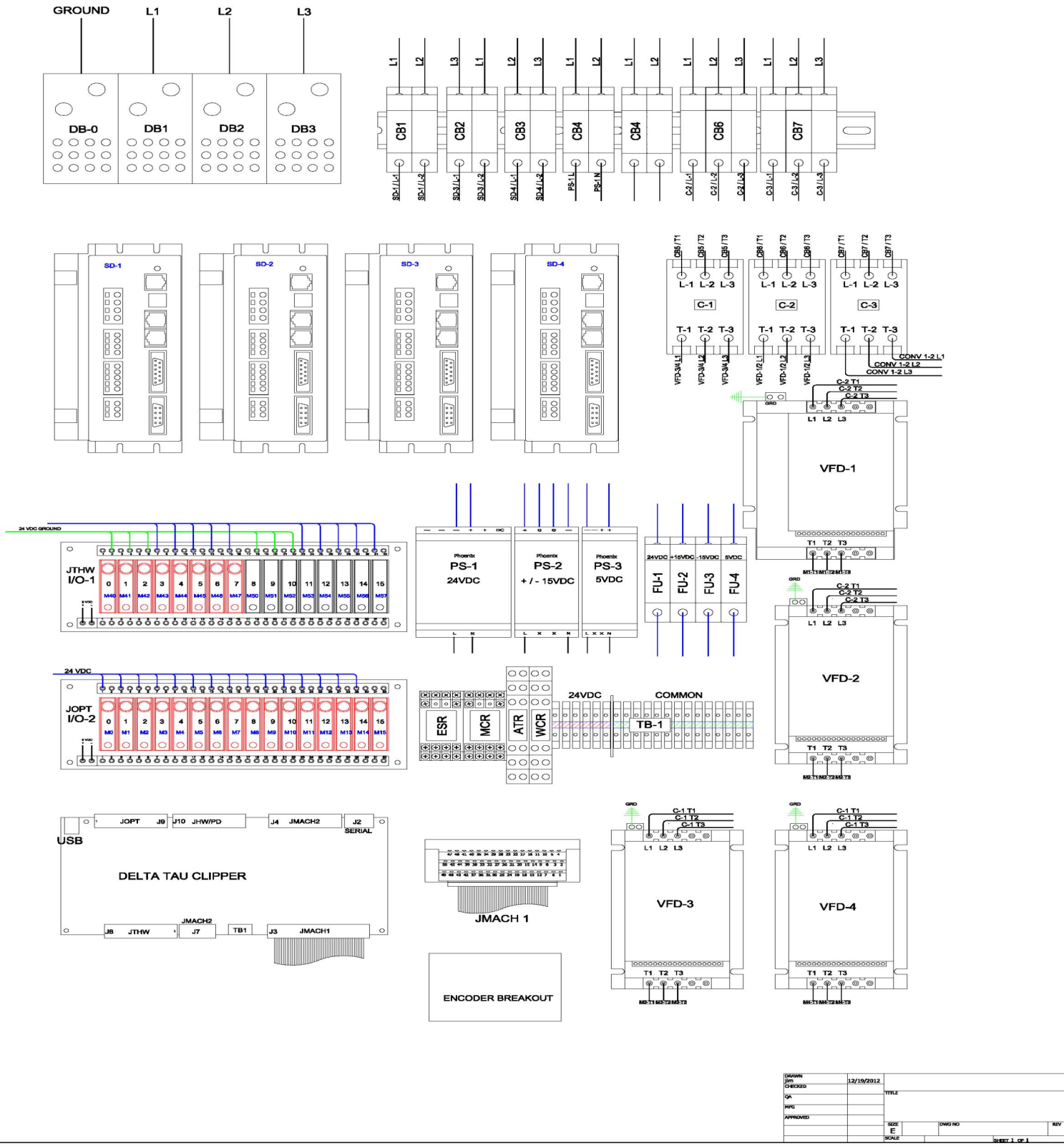

NSK DRIVE PANEL 3/15/2013 TO 12/31/2015

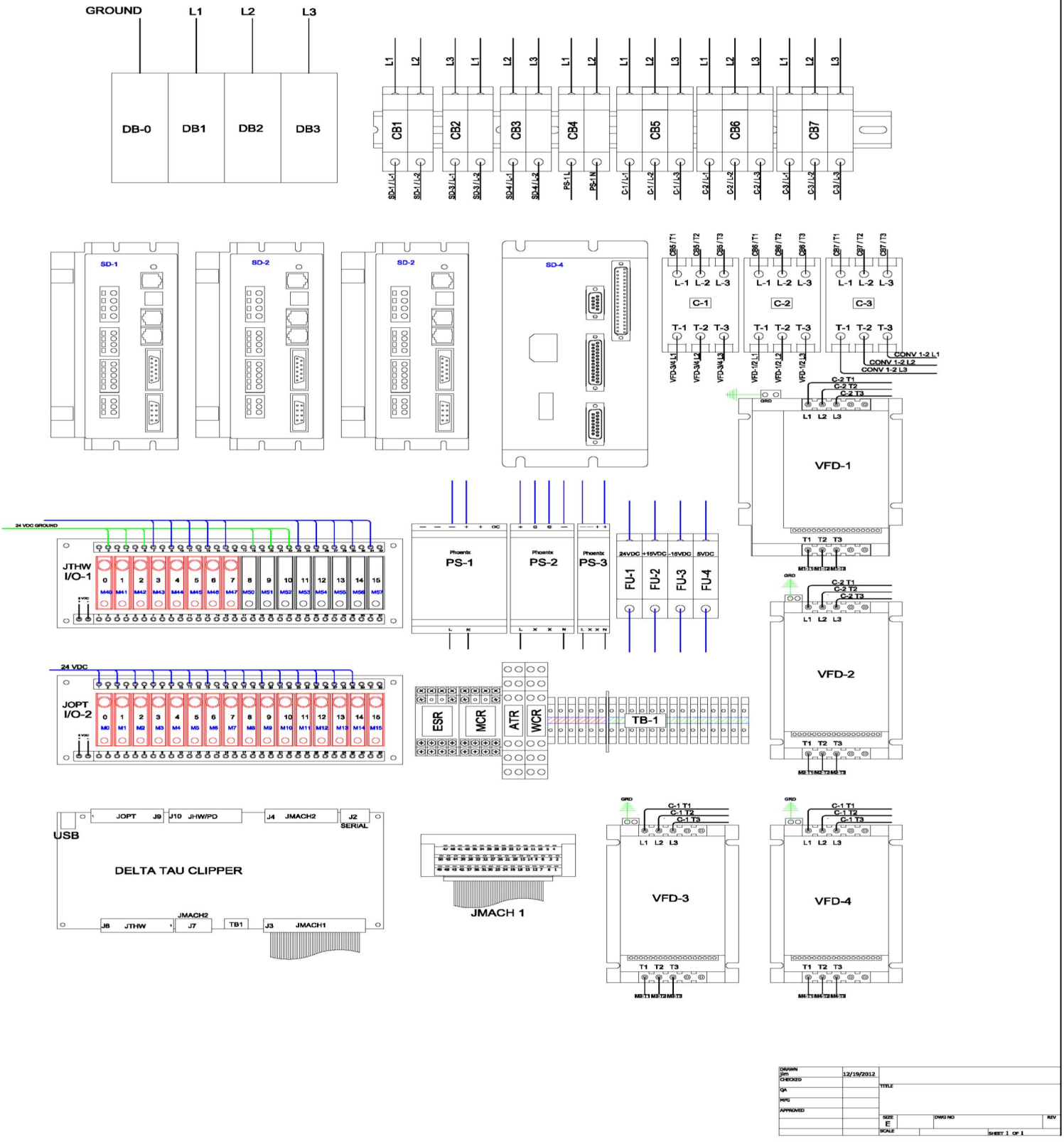

JMACH WIRE LAYOUT

CONTROL CABLES XL-SAW SHIMPO STYLE

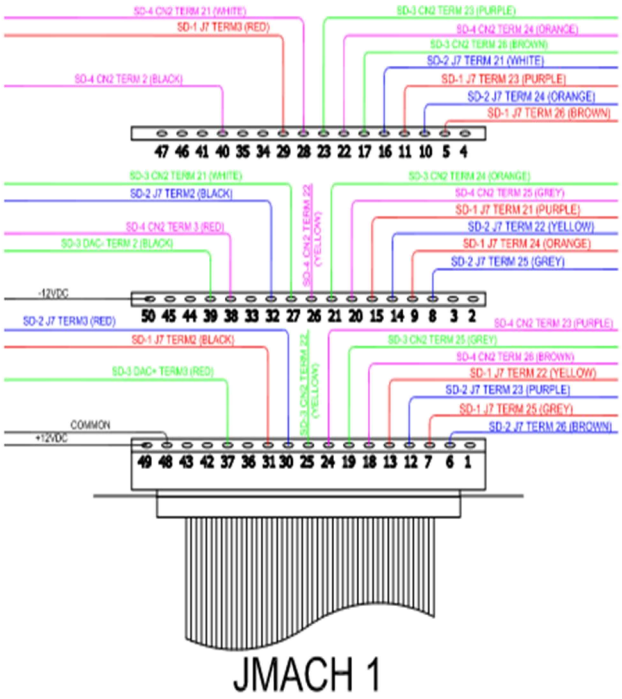

50TB JMACH1	COLOR	SD-1
5	BROWN	26
7	GREY	25
9	ORANGE	24
11	PURPLE	23
13	YELLOW	22
15	WHITE	21
29	RED	3
31	BLACK	2

50TB JMACH1	COLOR	SD-2
6	BROWN	26
8	GREY	25
10	ORANGE	24
12	PURPLE	23
14	YELLOW	22
16	WHITE	21
30	RED	3
32	BLACK	2

50TB JMACH1	COLOR	SD-3
17	BROWN	26
19	GREY	25
21	ORANGE	24
23	PURPLE	23
25	YELLOW	22
27	WHITE	21
37	RED	3
39	BLACK	2

50TB JMACH1	COLOR	SD-4
18	BROWN	26
20	GREY	25
22	ORANGE	24
24	PURPLE	23
26	YELLOW	22
28	WHITE	21
38	RED	3
40	BLACK	2

JMACH WIRE LAYOUT

CONTROL CABLES XL-SAW NSK STYLE

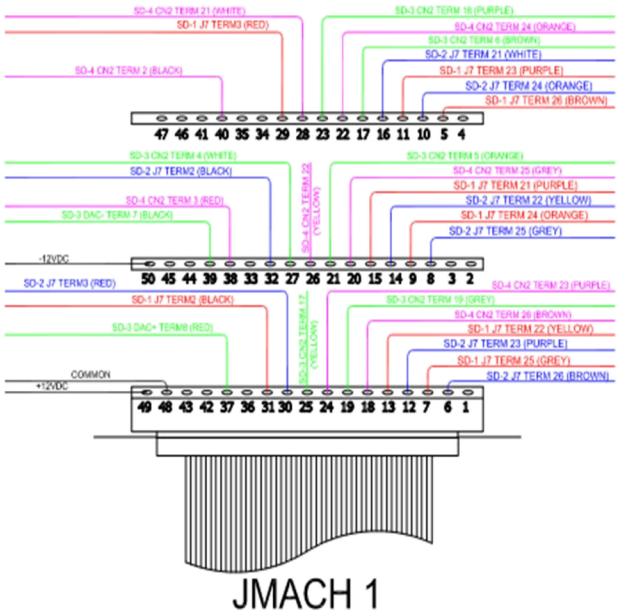

50TB JMACH1	COLOR	SD-1
5	BROWN	26
7	GREY	25
9	ORANGE	24
11	PURPLE	23
13	YELLOW	22
15	WHITE	21
29	RED	3
31	BLACK	2

50TB JMACH1	COLOR	SD-2
6	BROWN	26
8	GREY	25
10	ORANGE	24
12	PURPLE	23
14	YELLOW	22
16	WHITE	21
30	RED	3
32	BLACK	2

50TB JMACH1	COLOR	SD-3
17	BROWN	6
19	GREY	19
21	ORANGE	5
23	PURPLE	18
25	YELLOW	17
27	WHITE	4
37	RED	8
39	BLACK	7

50TB JMACH1	COLOR	SD-4
18	BROWN	26
20	GREY	25
22	ORANGE	24
24	PURPLE	23
26	YELLOW	22
28	WHITE	21
38	RED	3
40	BLACK	2

TYPICAL SERVO WIRING

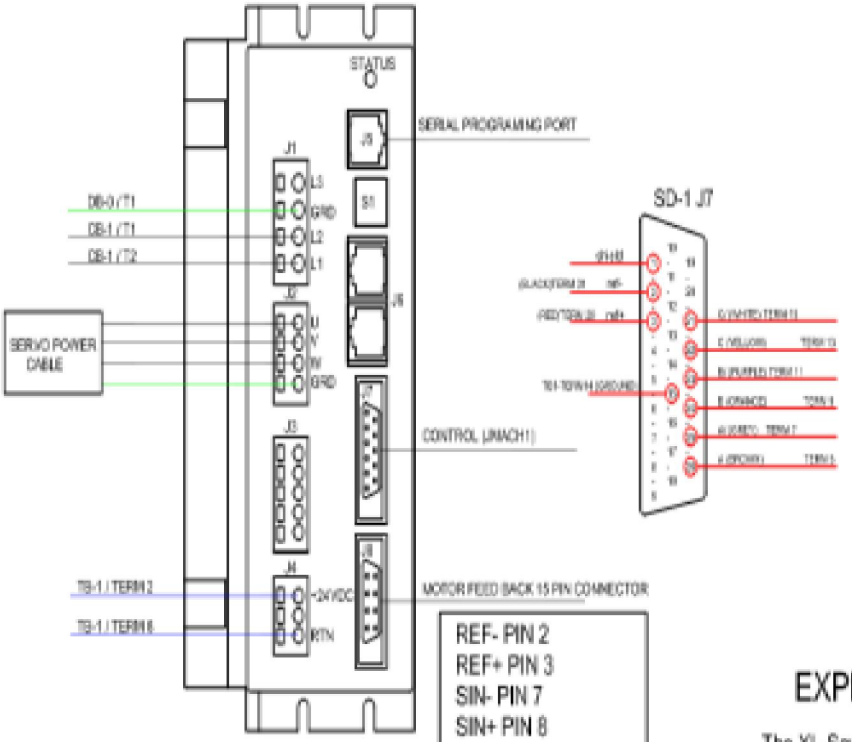

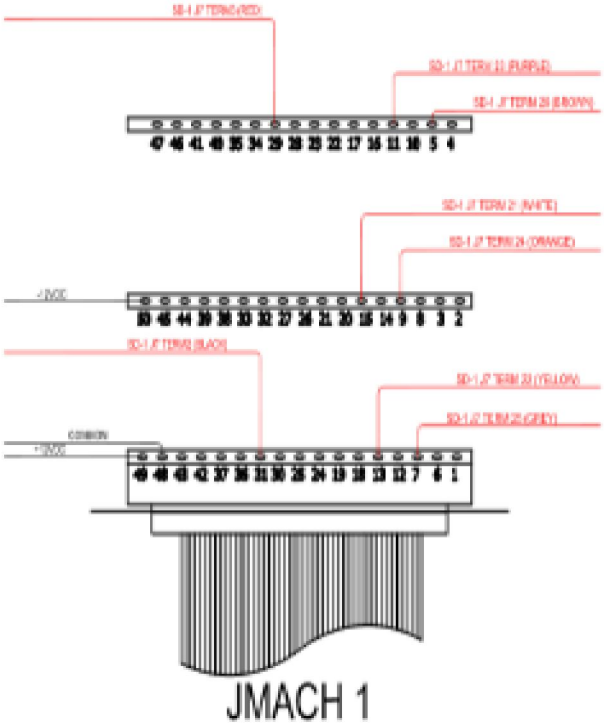

REF- PIN 2
REF+ PIN 3
SIN- PIN 7
SIN+ PIN 8
COS- PIN 12
COS+ PIN 13
SIGNAL GRD PIN 15

BALDOR SERVO FEEDBACK

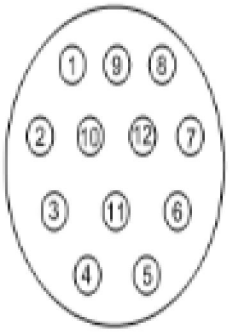

R1 REF HI	PIN 1
R2 REF LO	PIN 2
S1 COS+	PIN 3
S3 COS-	PIN 4
S2 SINE+	PIN 5
S4 SINE-	PIN 6
OPEN	7-12

EXPLANATION OF TYPICAL SERVO SYSTEM

The XL-Saw employs a proportional analog servo control. Each servo is in a closed loop i.e. the servo is commanded to a position and the servo motor resolver reports back to the controller its current position. These positions must stay within the prescribed following error limits, or the drive will fault in what is refered to as a "fatal following error".

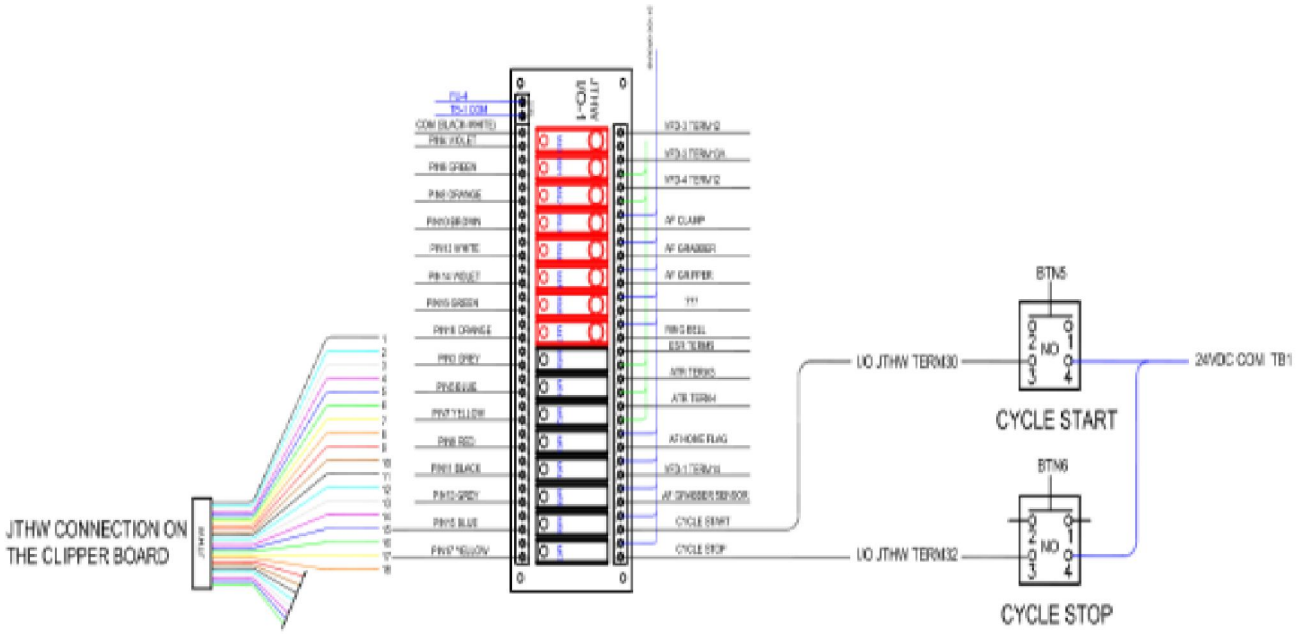

EXPLANATION OF THE CYCLE START/STOP CIRCUIT

The Cycle Start/Stop is very straight forward. It contains 2 normally open switches that when pushed send 24vdc current to I/O inputs M56 (cycle start) and M57 (cycle stop) This signal is sent through the I/O board to the JTHW connector on the Clipper motion board. These 2 values are constantly scanned for in PLC7 and will start the cycle when M56=1 then will also stop the cycle when M57=1

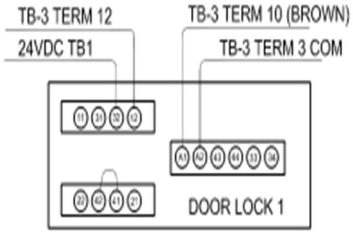

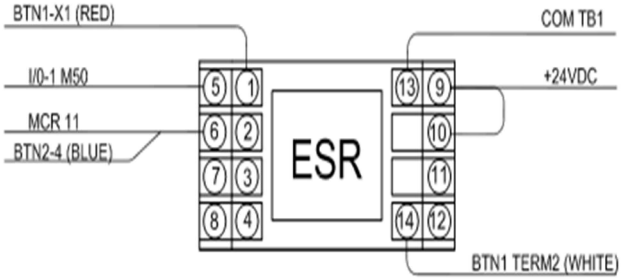

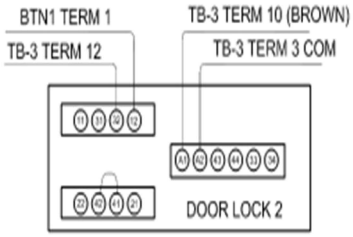

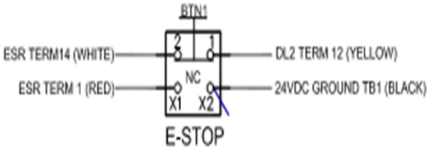

EXPLANATION OF E-STOP CIRCUIT

24vdc starts at TB1 and runs to term 32 on door lock 1, it runs thru the closed contact to term 12 and then on to term 32 on door lock 2, it then runs thru the closed contact to term 12 then on to term 1 on the e-stop panel button. From term 2 on the e-stop button it runs to term 14 on the e-stop relay. Term 13 on the e-stop relay provides ground to the circuit pulling in the contacts to activate the e-stop relay. Open contacts at either of the door locks or at the e-stop button will disable the control (e-stop condition) Loss of 24vdc will do the same.

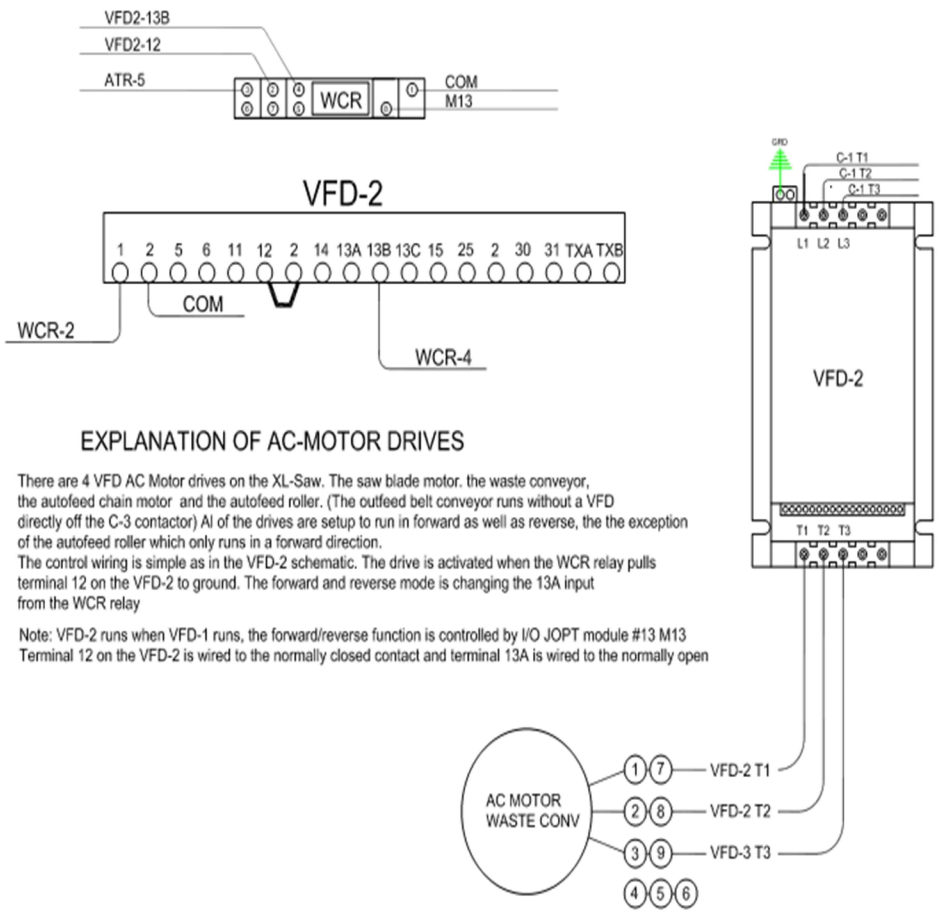

EXPLANATION OF AC-MOTOR DRIVES

There are 4 VFD AC Motor drives on the XL-Saw. The saw blade motor. the waste conveyor, the autofeed chain motor and the autofeed roller. (The outfeed belt conveyor runs without a VFD directly off the C-3 contactor) Al of the drives are setup to run in forward as well as reverse, the the exception of the autofeed roller which only runs in a forward direction.
The control wiring is simple as in the VFD-2 schematic. The drive is activated when the WCR relay pulls terminal 12 on the VFD-2 to ground. The forward and reverse mode is changing the 13A input from the WCR relay

Note: VFD-2 runs when VFD-1 runs, the forward/reverse function is controlled by I/O JOPT module #13 M13
Terminal 12 on the VFD-2 is wired to the normally closed contact and terminal 13A is wired to the normally open

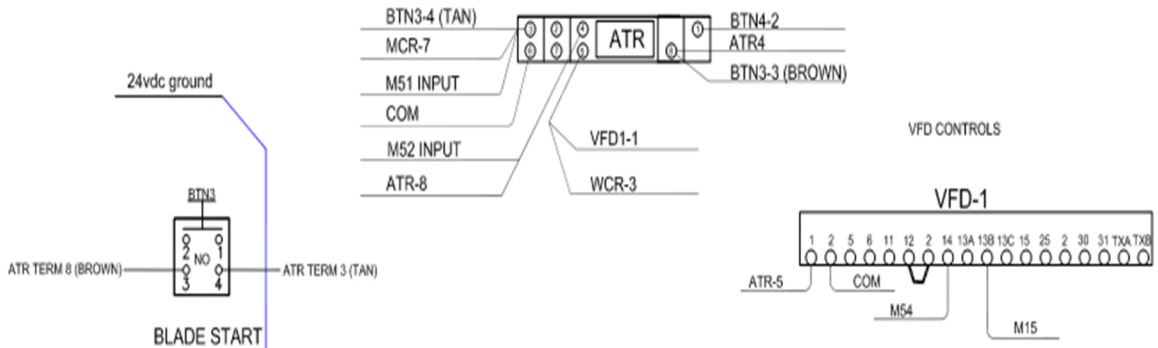

EXPLANATION OF BLADE START CIRCUIT

By pushing the Blade Start button you are sending 24vdc to ATR term 8 the common is supplied by the Blade Stop button to ATR term1 which is a normally closed momentary switch. The 24vdc is supplied by the MCR relay at ATR relay term 3. The ATR is disabled by dropping the common when pushing the Blade Stop button. VFD-1 is enabled when the common on ATR term 6 make continuity with ATR term 5 which pulls VFD term1 to ground.

The AC-Tech VFD-1 must be powered up before it gets the start signal (for more information refer to SCF Series AC-Tech operation manual)

OPTO-22 JTHW

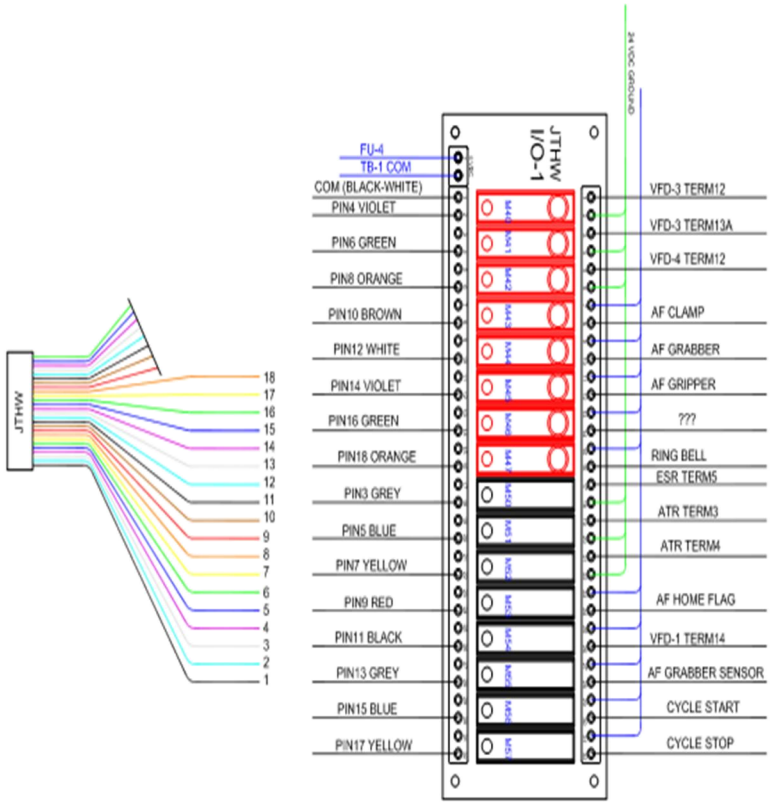
JTHW
18
17
16
15
14
13
12
11
10
9
8
7
6
5
4
3
2
1
FU-4
TB-1 COM
COM (BLACK-WHITE)
PIN4 VIOLET
PIN6 GREEN
PIN8 ORANGE
PIN10 BROWN
PIN12 WHITE
PIN14 VIOLET
PIN16 GREEN
PIN18 ORANGE
PIN3 GREY
PIN5 BLUE
PIN7 YELLOW
PIN9 RED
PIN11 BLACK
PIN13 GREY
PIN15 BLUE
PIN17 YELLOW
JTHW
I/O-1
24 VDC GROUND
VFD-3 TERM12
VFD-3 TERM13A
VFD-4 TERM12
AF CLAMP
AF GRABBER
AF GRIPPER
???
RING BELL
ESR TERM5
ATR TERM3
ATR TERM4
AF HOME FLAG
VFD-1 TERM14
AF GRABBER SENSOR
CYCLE START
CYCLE STOP

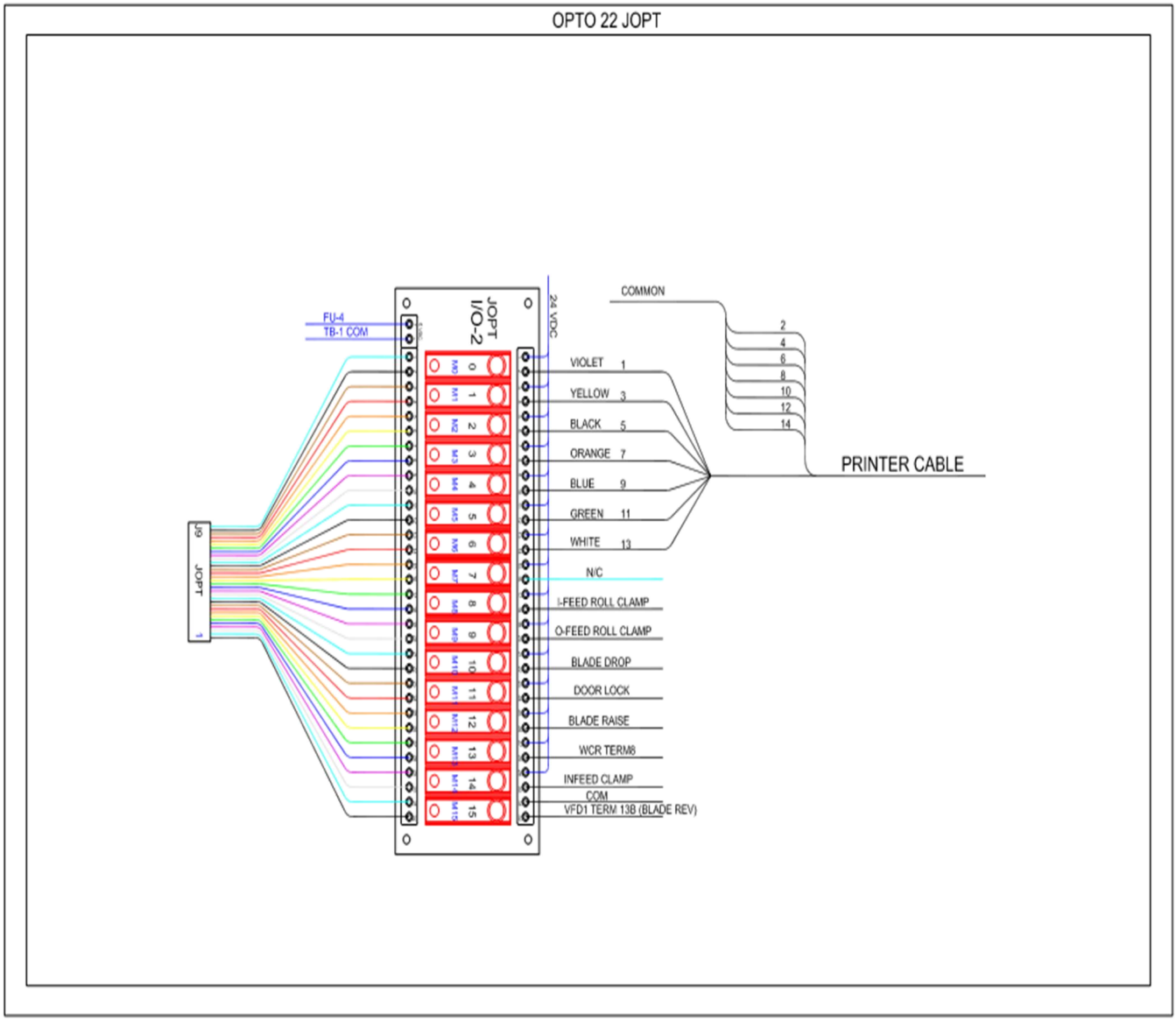
OPTO 22 JOPT
FU-4
TB-1 COM
JOPT
I/O-2
24 VDC
COMMON
2
4
6
8
10
12
14
PRINTER CABLE
VIOLET 1
YELLOW 3
BLACK 5
ORANGE 7
BLUE 9
GREEN 11
WHITE 13
N/C
I-FEED ROLL CLAMP
O-FEED ROLL CLAMP
BLADE DROP
DOOR LOCK
BLADE RAISE
WCR TERM8
INFEED CLAMP
COM
VFD1 TERM 13B (BLADE REV)
J9
JOPT

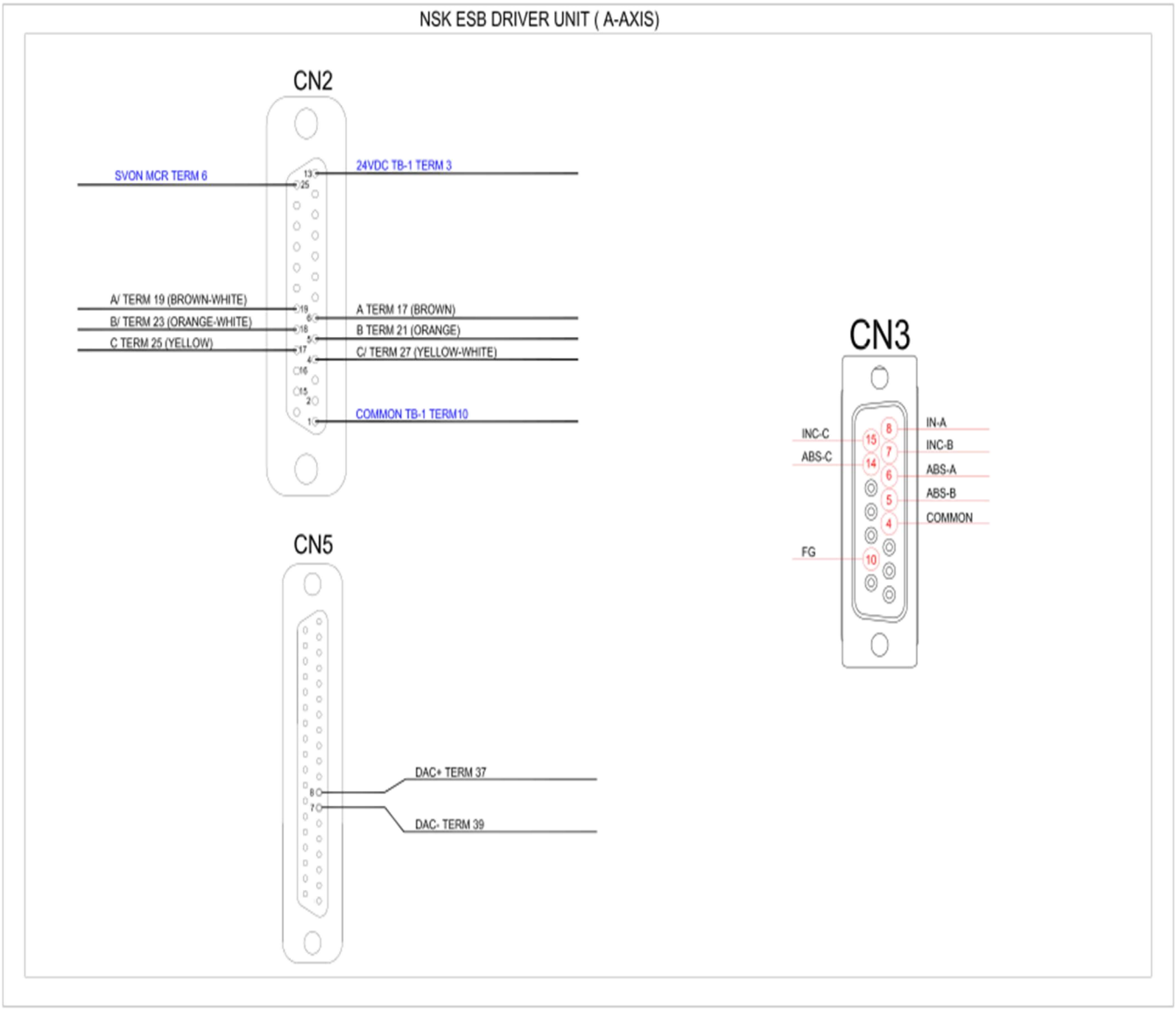
NSK ESB DRIVER UNIT (A-AXIS)
CN2
SVON MCR TERM 6
24VDC TB-1 TERM 3
A/ TERM 19 (BROWN-WHITE)
B/ TERM 23 (ORANGE-WHITE)
C TERM 25 (YELLOW)
A TERM 17 (BROWN)
B TERM 21 (ORANGE)
C/ TERM 27 (YELLOW-WHITE)
COMMON TB-1 TERM10
CN3
INC-C
ABS-C
FG
IN-A
INC-B
ABS-A
ABS-B
COMMON
CN5
DAC+ TERM 37
DAC- TERM 39

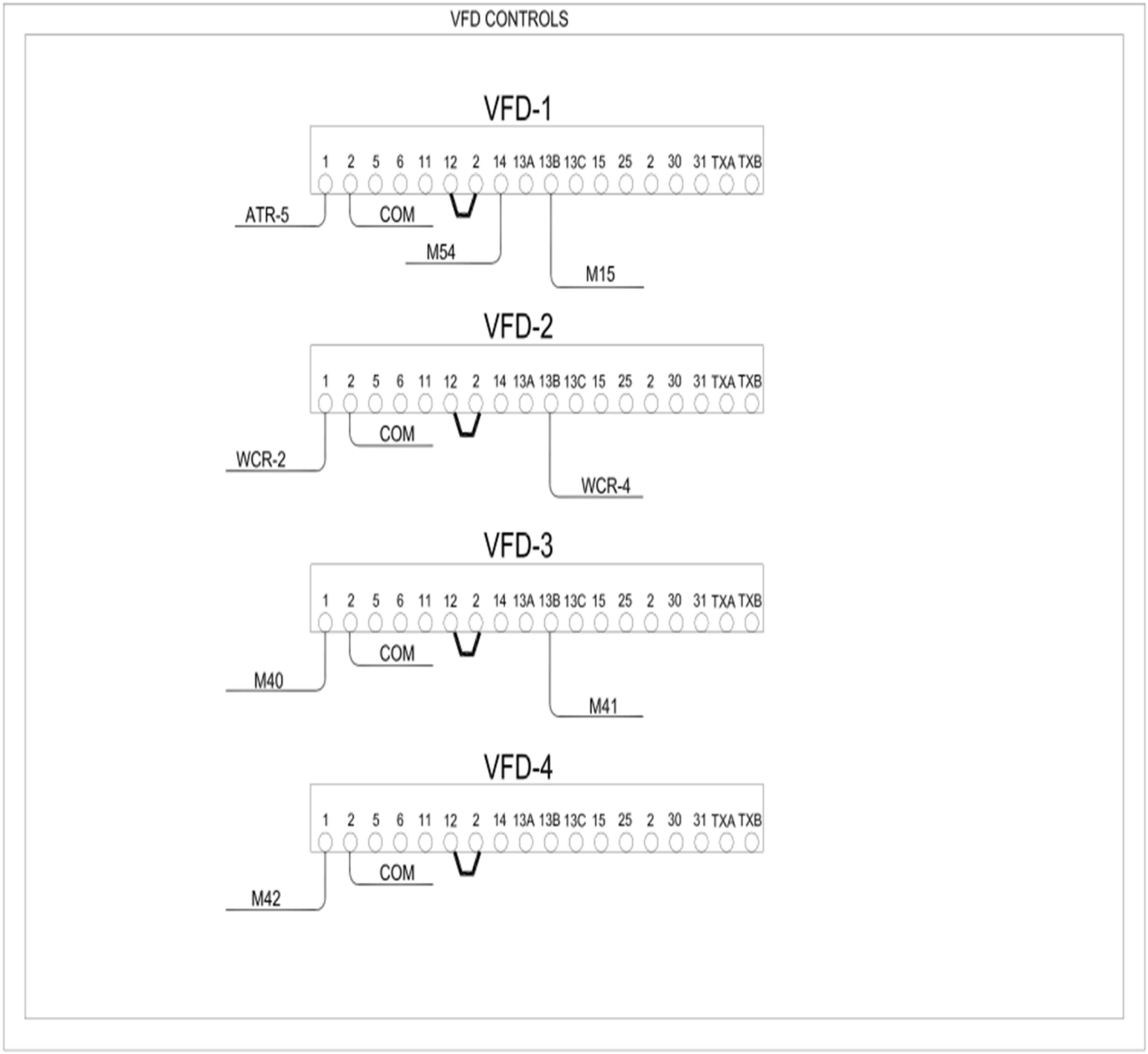
VFD CONTROLS
VFD-1
1 2 5 6 11 12 2 14 13A 13B 13C 15 25 2 30 31 TXA TXB
ATR-5
COM
M54
M15
VFD-2
1 2 5 6 11 12 2 14 13A 13B 13C 15 25 2 30 31 TXA TXB
COM
WCR-2
WCR-4
VFD-3
1 2 5 6 11 12 2 14 13A 13B 13C 15 25 2 30 31 TXA TXB
COM
M40
M41
VFD-4
1 2 5 6 11 12 2 14 13A 13B 13C 15 25 2 30 31 TXA TXB
COM
M42

NSK ESB DRIVER UNIT (A-AXIS)

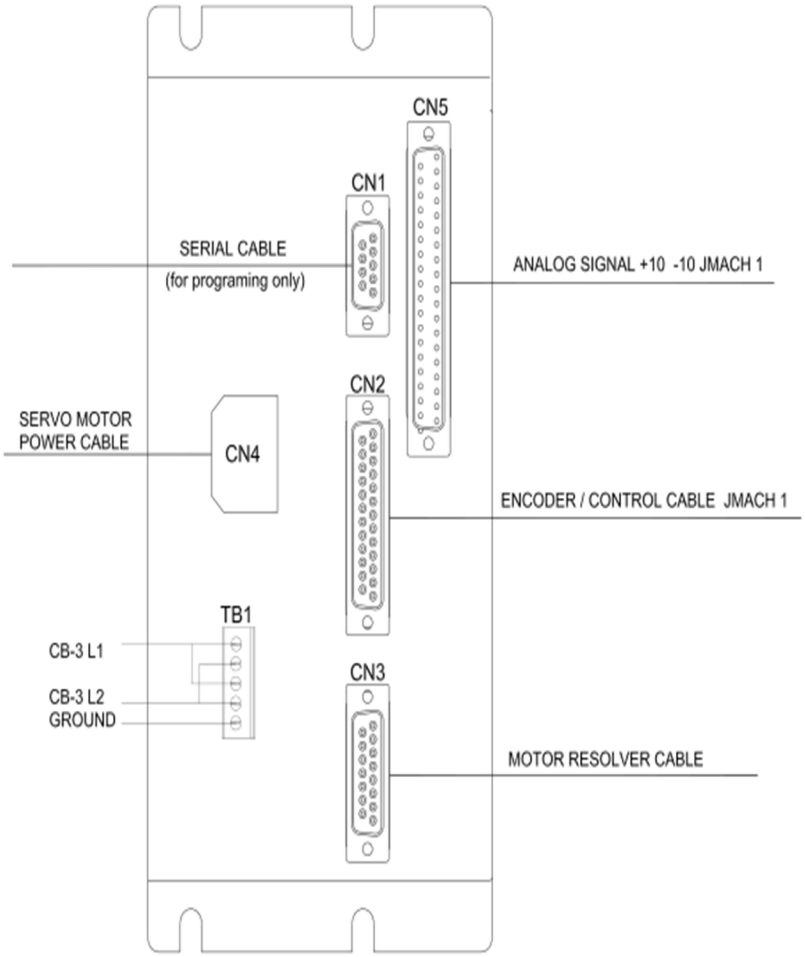

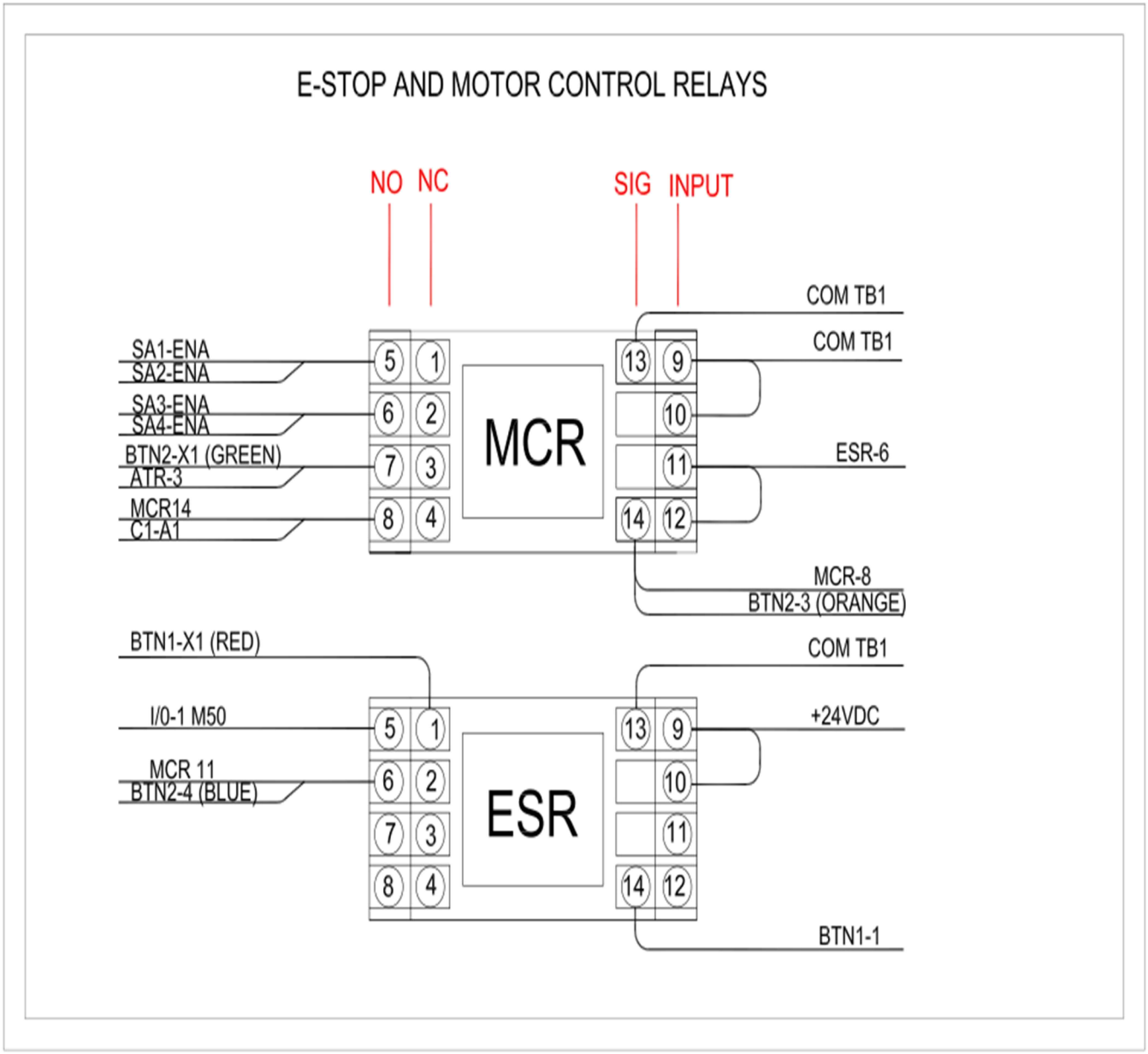
E-STOP AND MOTOR CONTROL RELAYS
NO
NC
SIG
INPUT
COM TB1
COM TB1
SA1-ENA
SA2-ENA
SA3-ENA
SA4-ENA
BTN2-X1 (GREEN)
ATR-3
MCR14
C1-A1
MCR
ESR-6
MCR-8
BTN2-3 (ORANGE)
BTN1-X1 (RED)
COM TB1
I/0-1 M50
MCR 11
BTN2-4 (BLUE)
ESR
+24VDC
BTN1-1

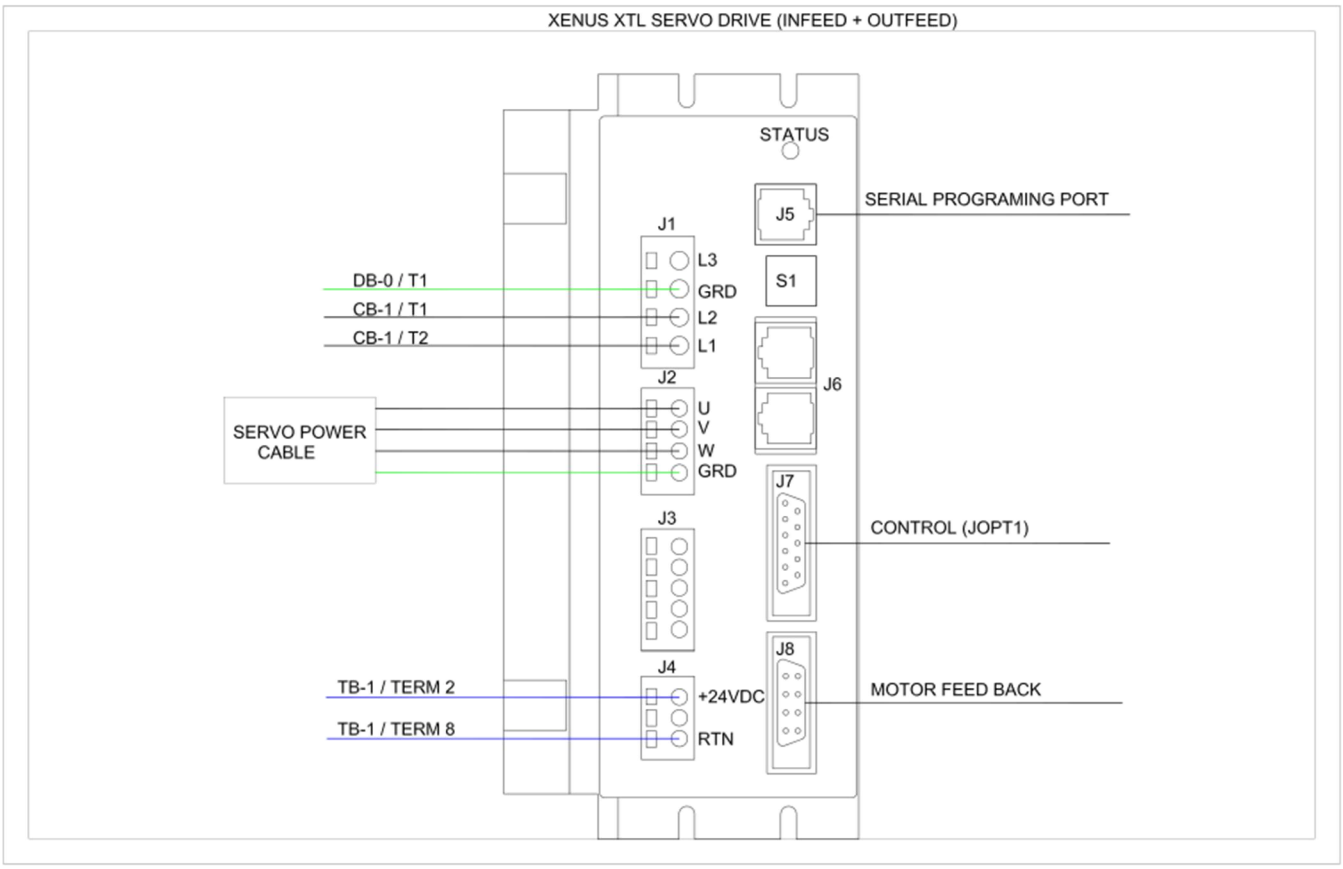
XENUS XTL SERVO DRIVE (INFEED + OUTFEED)
STATUS
J5
SERIAL PROGRAMING PORT
J1
L3
GRD
L2
L1
S1
DB-0 / T1
CB-1 / T1
CB-1 / T2
J2
J6
U
V
W
GRD
SERVO POWER CABLE
J7
J3
CONTROL (JOPT1)
J8
J4
+24VDC
RTN
TB-1 / TERM 2
TB-1 / TERM 8
MOTOR FEED BACK

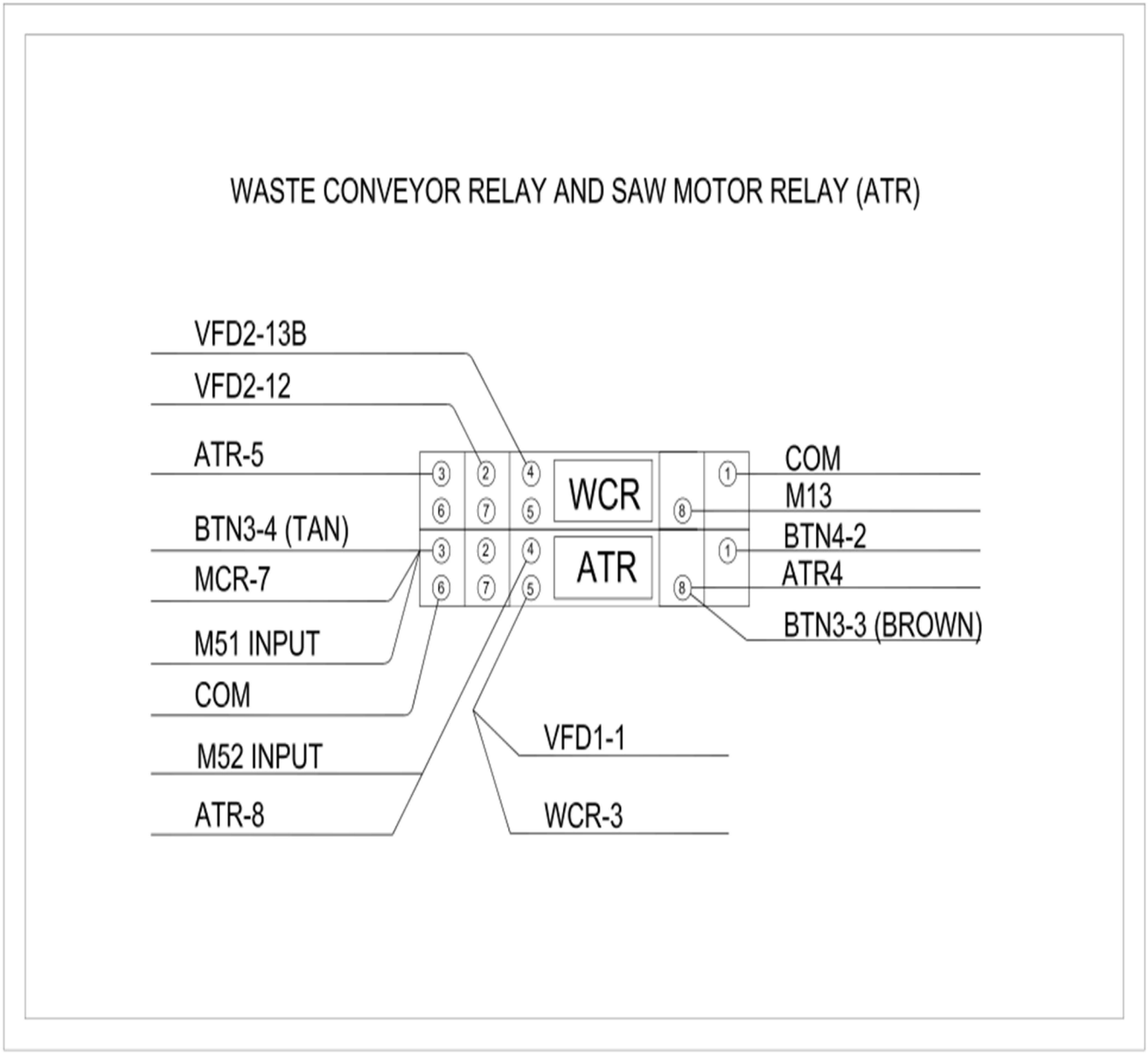
WASTE CONVEYOR RELAY AND SAW MOTOR RELAY (ATR)
VFD2-13B
VFD2-12
ATR-5
BTN3-4 (TAN)
MCR-7
M51 INPUT
COM
M52 INPUT
ATR-8
WCR
ATR
COM
M13
BTN4-2
ATR4
BTN3-3 (BROWN)
VFD1-1
WCR-3